Oxford Cambridge and RSA

Wednesday 21 May 2025 – Afternoon

AS Level Physics A

H156/02 Depth in physics

Time allowed: 1 hour 30 minutes

You must have:
- the Data, Formulae and Relationships Booklet
- a ruler (cm/mm)

You can use:
- a scientific or graphical calculator

Please write clearly in black ink. **Do not write in the barcodes.**

Centre number | | | | | | Candidate number | | | | |

First name(s) _____

Last name _____

INSTRUCTIONS
- Use black ink. You can use an HB pencil, but only for graphs and diagrams.
- Write your answer to each question in the space provided. If you need extra space use the lined pages at the end of this booklet. The question numbers must be clearly shown.
- Answer **all** the questions.
- Where appropriate, your answer should be supported with working. Marks might be given for using a correct method, even if your answer is wrong.

INFORMATION
- The total mark for this paper is **70**.
- The marks for each question are shown in brackets **[ ]**.
- Quality of extended response will be assessed in questions marked with an asterisk (*****).
- This document has **24** pages.

ADVICE
- Read each question carefully before you start your answer.

© OCR 2025 [601/4742/8]
DC (DE/FC) 358126/5
OCR is an exempt Charity

Answer **all** the questions in this section.

1 A high speed passenger train is travelling at a velocity of $54\,\mathrm{m\,s^{-1}}$.

The simplified graph shows the variation with time t of the velocity v of the train until it stops. At $t = 0$ the driver starts to think about applying the brakes.

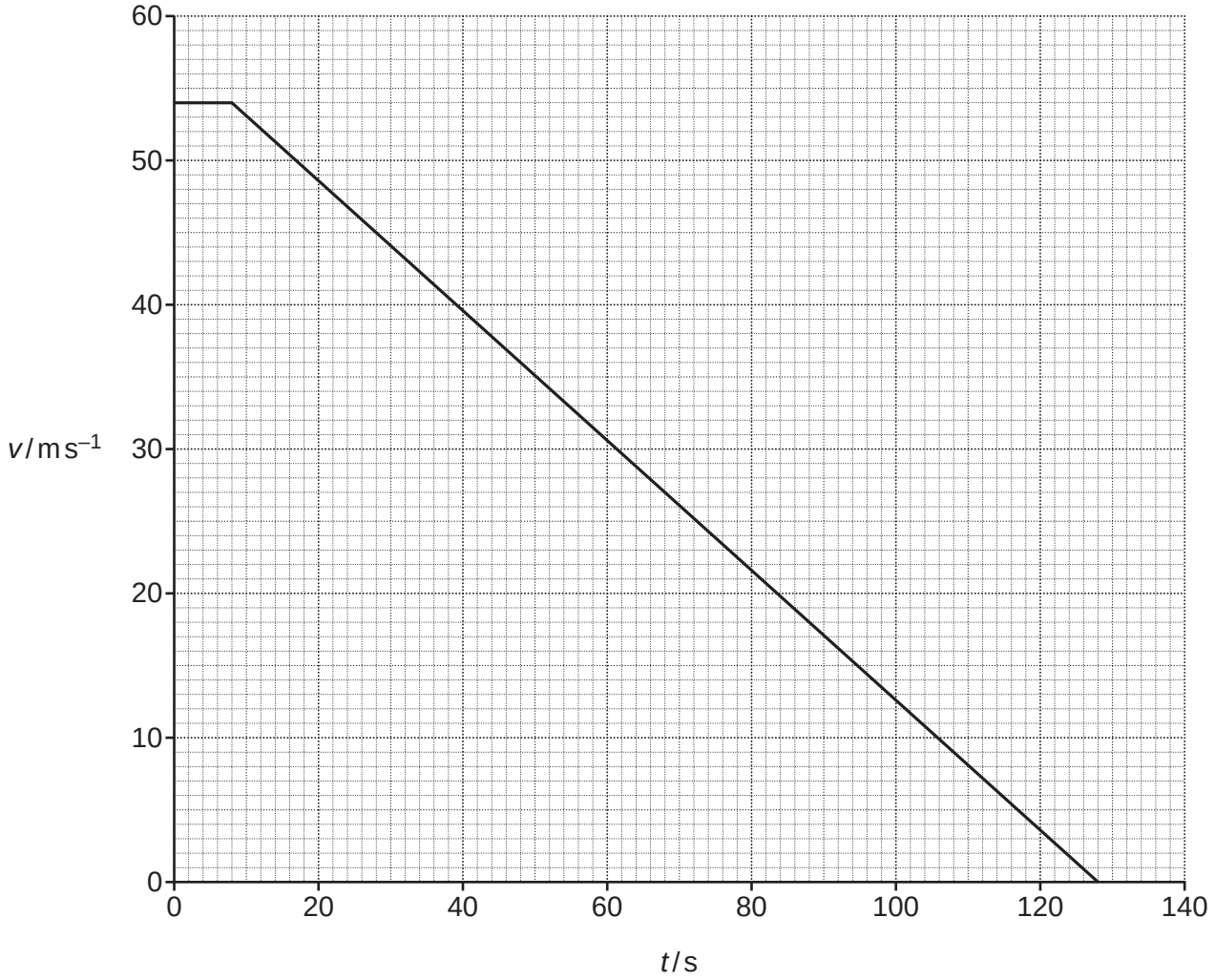

© OCR 2025

(a) Use the graph to determine the acceleration *a* of the train while the driver applies the brakes.

a = ... $m\,s^{-2}$ **[1]**

(b) Use the graph to determine the total stopping distance *d* of the train from *t* = 0.

d = ... m **[2]**

(c) Suggest why the graph does **not** show the real motion of the train.

.....

.....

..... **[2]**

© OCR 2025

2

(a) A student has six similar metal spherical balls. To determine the mean mass of a ball, the student measures the diameters of the balls.

The table shows the measurements.

Diameter / cm	0.565	0.562	0.555	0.561	0.562	0.556

The density of the metal is $(8.9 \pm 0.1)\,\mathrm{g\,cm^{-3}}$.

(i) Show that the mean mass *m* of each of the balls is approximately 0.82 g.

[2]

(ii) Calculate the percentage uncertainty in *m*.

percentage uncertainty = ... % **[2]**

© OCR 2025

(b) A hollow cylinder of mass 18 g has height 7.1 cm and cross-sectional area 6.2 cm^2.

The six balls from part **(a)** are placed in the cylinder.

The cylinder is placed into a beaker of tap water. It floats upright as shown in the diagram.

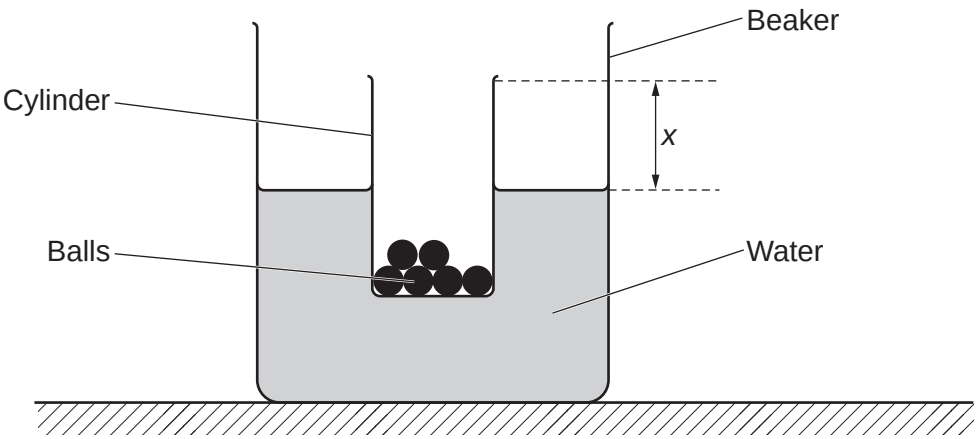

The top of the cylinder is a distance *x* above the surface of the water.

The density of tap water is 1.0 g cm^{-3}.

(i) Calculate *x*.

x = ... cm **[3]**

(ii) The student repeats the experiment using sea water.

State how the value of *x* changes.

Explain your answer.

.....

.....

..... **[2]**

© OCR 2025

3

(a) To investigate mobile charge carriers, a student soaks a sheet of filter paper in a solution of salt. They fix metal conductors to the filter paper and connect the conductors to a power supply as shown in **Fig. 3.1**.

Fig. 3.1

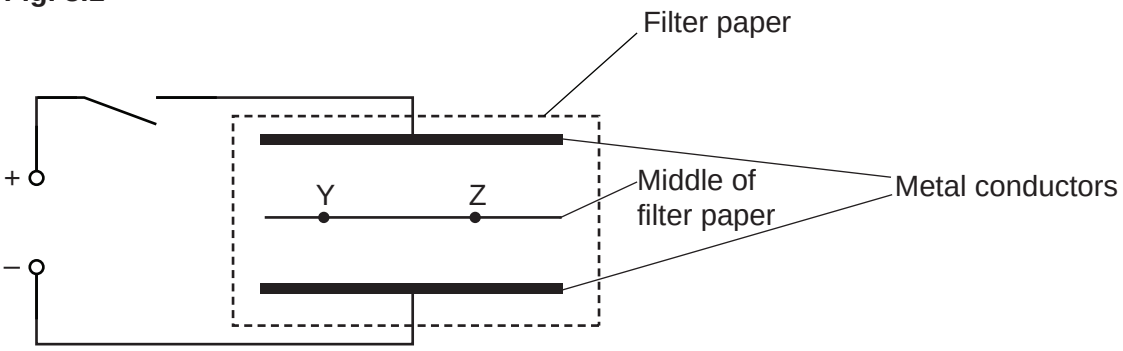

The student places two different soluble coloured crystals, Y and Z, on the middle of the filter paper as shown.

They close the switch.

After 20 s, due to the movement of the mobile charge carriers in crystals Y and Z, the filter paper appears as shown in **Fig. 3.2**.

Fig. 3.2

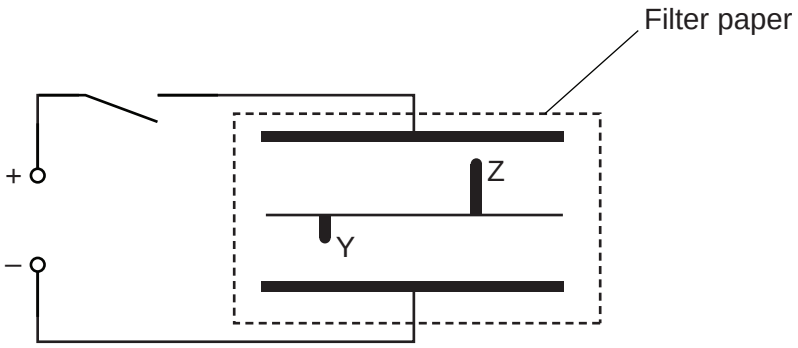

(i) On the filter paper shown in **Fig. 3.2**, **draw an arrow** to indicate the conventional current I for the visible charge carriers of crystal Z. **Label the arrow I.** **[1]**

(ii) Compare the visible charge carriers of crystal Y with the visible charge carriers of crystal Z.

Explain your answer.

.....

.....

.....

.....

.....

..... **[4]**

© OCR 2025

(b) A student sets up the circuit shown in **Fig. 3.3**.

Fig. 3.3

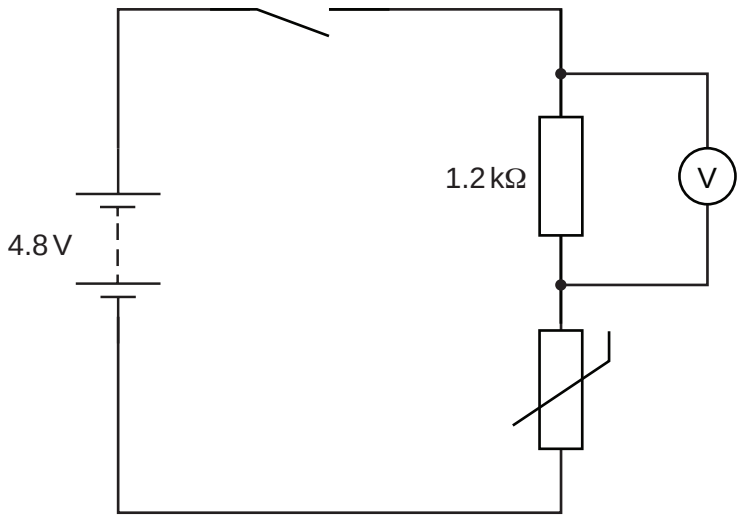

The battery has an electromotive force (e.m.f.) of 4.8 V and negligible internal resistance.

The voltmeter measures the potential difference (p.d.) across the resistor of resistance 1.2 kΩ.

(i) At a temperature of 20 °C, the resistance of the thermistor is 2.6 kΩ.

Calculate the voltmeter reading *V*.

V = ... V **[2]**

(ii) The student places the thermistor in hot water.

At a temperature of 60 °C, the voltmeter reads 3.2 V.

Calculate the resistance *R* of the thermistor.

R = ... Ω **[2]**

© OCR 2025

(iii) The student replaces the resistor of resistance 1.2 kΩ with a resistor of resistance 120 kΩ.

Suggest why 120 kΩ is **not** a sensible value to use to measure the temperature of a sample of water between 0 °C and 100 °C.

.....

.....

.....

..... **[2]**

© OCR 2025

BLANK PAGE

DO NOT WRITE ON THIS PAGE

© OCR 2025

4 A student has a battery of electromotive force (e.m.f.) 2.2 V.

(a) The quantities e.m.f. and potential difference (p.d.) are both measured in volts, V.

Describe **one** other similarity and **one** difference between e.m.f. and p.d.

similarity .....

.....

difference .....

.....

[2]

(b)* The student has two cells **A** and **B**, the battery of e.m.f. 2.2 V and a potentiometer. The potentiometer is constructed using 1.000 m of resistance wire.

Describe, with the aid of a suitable diagram, how the student can safely conduct an experiment to compare the e.m.f. of cell **A** with the e.m.f. of cell **B**.

The student uses the potentiometer. Include any other equipment they need. **[6]**

Diagram

© OCR 2025

Additional answer space if required

© OCR 2025

5 A shopper pushes a trolley loaded with shopping at a constant speed of $0.75\,\mathrm{m\,s^{-1}}$ along a horizontal surface as shown in **Fig. 5.1**.

Fig. 5.1

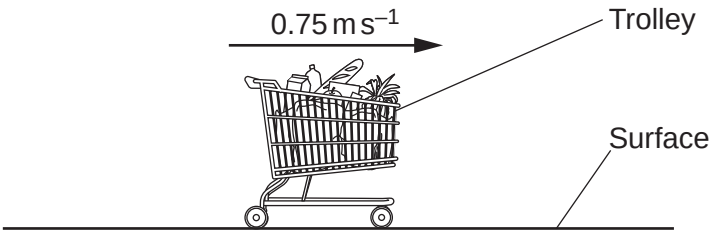

The mass of the loaded trolley is 49 kg.

The force pushing the trolley is T.

The force of friction F_f between the trolley and the surface is 24 N.

(a) The loaded trolley is represented by • in **Fig. 5.2**.

Fig. 5.2

•

(i) On **Fig. 5.2** draw a free-body diagram representing **all** the forces acting on the loaded trolley. Label the forces. **[4]**

(ii) State the value of T.

T = ... N **[1]**

© OCR 2025

(b) The shopper now pushes the loaded trolley up a slope made from the same surface, as shown in **Fig. 5.3**.

Fig. 5.3

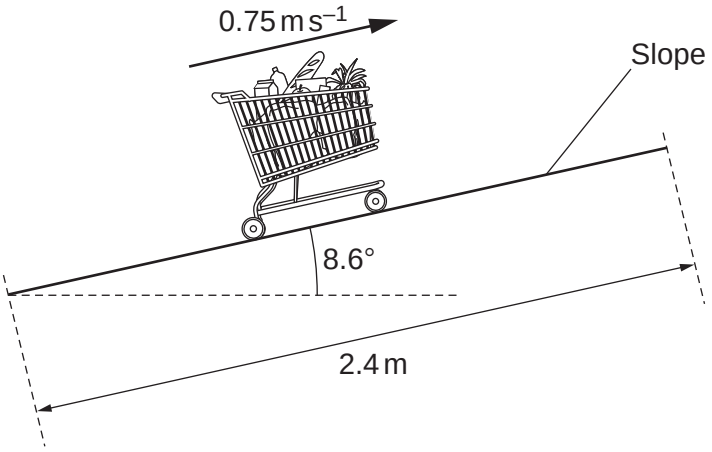

The angle between the horizontal and the slope is 8.6° and the trolley travels a distance of 2.4 m along the slope.

The force of friction F_f between the trolley and the surface is 24 N.

(i) The equation relating power P to force F and velocity v is $P = Fv$.

Derive this equation from first principles.

[2]

(ii) Calculate the work done W against the force of gravity in moving the trolley along the slope.

W = ... J **[2]**

(iii) Calculate the **total** power P needed to push the trolley up the slope at a constant speed of $0.75\,\text{m}\,\text{s}^{-1}$.

P = ... W **[2]**

© OCR 2025

6 A teacher uses a linear air track to investigate collisions.

Fig. 6.1 shows the arrangement of apparatus.

Fig. 6.1

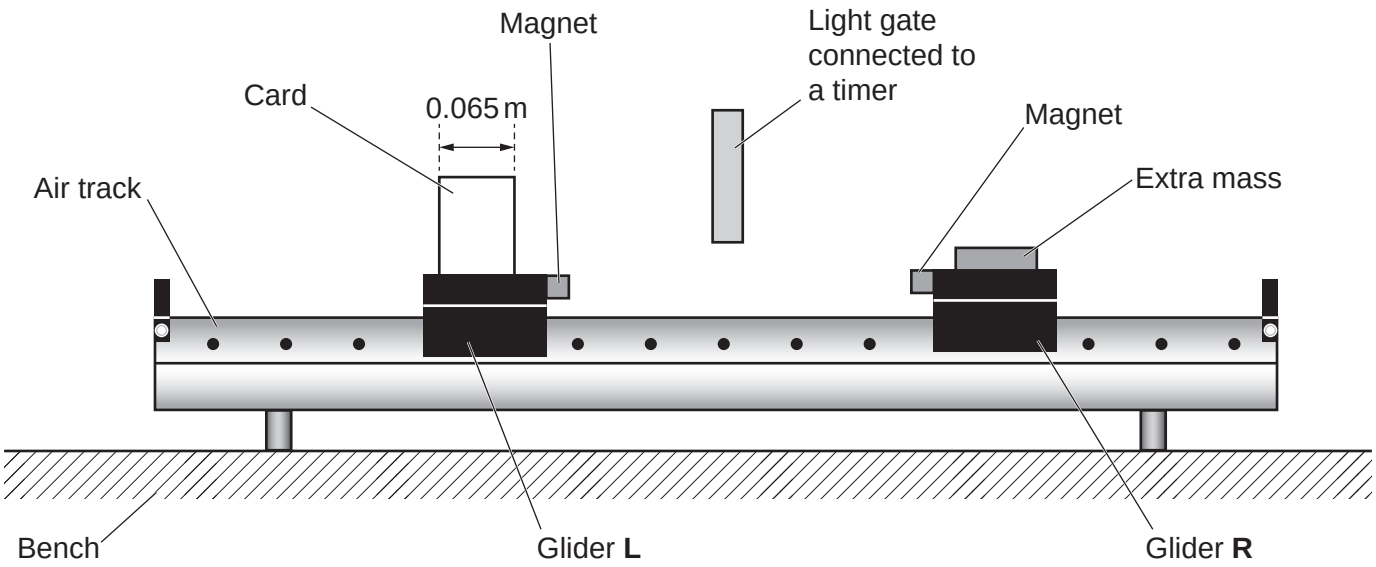

The teacher connects the light gate to a timer. The timer records the time for the card on glider **L** to pass through the light gate. The length of the card is 0.065 m.

The mass of glider **L** is 0.18 kg and the mass of glider **R** and the extra mass is 0.27 kg.

The two magnets are positioned so that they will repel each other.

(a) State the principle of conservation of momentum.

.....

.....

..... **[2]**

(b) Glider **R** is stationary. Glider **L** moves at velocity *u* from left to right and collides with **R**.
After the collision **L** rebounds and passes back through the light gate and **R** moves to the right.

The table records the time taken *t* for the card to pass through the light gate.

	t / s
L moving to the right before the collision	0.26
L moving to the left after the collision	1.30

© OCR 2025

(i) Show that the momentum of **L** before the collision is 0.045 kg m s^{-1}.

[1]

(ii) Determine the impulse of the force acting on **R**.

impulse = ... N s **[2]**

(iii) Calculate the velocity *v* of **R** after the collision.

v = ... m s^{-1} **[1]**

(c) The teacher changes one of the magnets to a cork and the other magnet to a pin and repeats the experiment.

Glider **L** moves from left to right. The time for the card to pass through the light gate is 0.26 s.

Glider **L** collides and sticks to glider **R**. After the collision **L** and **R** move together to the right.

Show, using energy considerations and the principle of conservation of momentum, that the collision is **inelastic**.

Include relevant calculations in your answer.

.....

.....

..... **[4]**

© OCR 2025

7 A laser emits green light of wavelength 5.32×10^{-7} m.

(a) The power of the laser is 1.0 mW.

Calculate the number of photons N emitted per second.

N = ... s^{-1} **[2]**

(b) A student uses the laser to look at the interference pattern through a double slit.

The student arranges the apparatus as shown in **Fig. 7.1**.

Fig. 7.1 (not to scale)

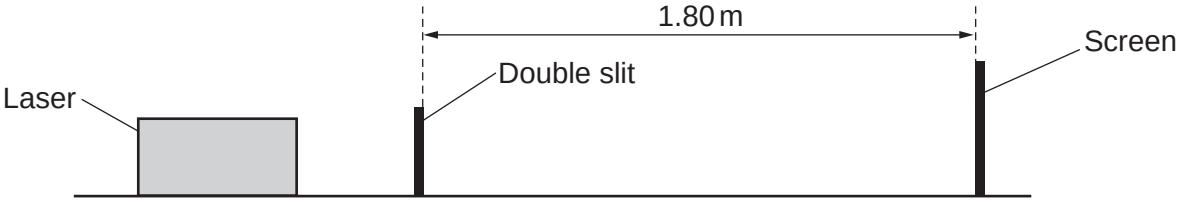

The width of the screen is about 6 cm.

The distance between the double slit and the screen is 1.80 m.

The student determines that the fringe width is 3.82 ± 0.02 mm.

(i) The light from the laser that falls on the double slit is coherent.

State the meaning of the term coherent.

.....

..... **[1]**

(ii) Explain how the student determined the fringe width.

.....

.....

.....

..... **[2]**

© OCR 2025

(iii) Calculate the separation *a* of the slits.

Give your answer to **3** significant figures.

a = ... m **[2]**

(c) Light from the laser is incident on an equilateral triangular glass prism as shown in **Fig. 7.2**.

Fig. 7.2

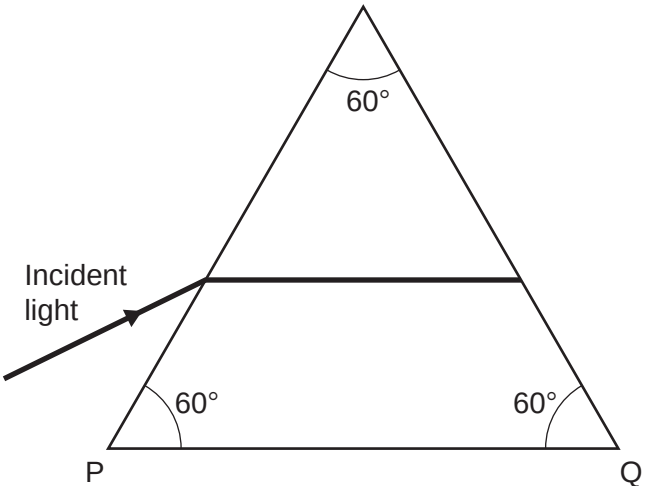

The refracted ray in the prism is parallel to PQ.

The refractive index of the glass is 1.48.

Calculate:

(i) the wavelength λ of the light in the glass

λ = ... m **[1]**

(ii) the angle of incidence *i* of the incident ray.

i = ... ° **[2]**

© OCR 2025

BLANK PAGE

DO NOT WRITE ON THIS PAGE

© OCR 2025

8* A student carries out an experiment to determine the Planck constant. They use the circuit shown.

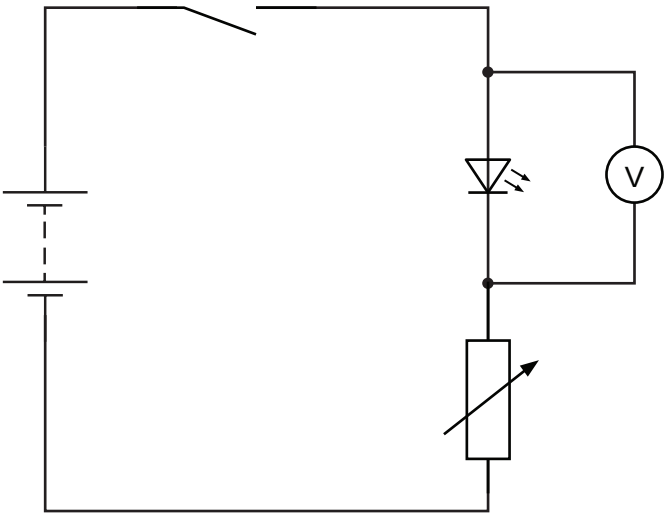

The frequency of the emitted light from the LED is *f* and the potential difference for the LED to just light is *V*.

The student repeats the experiment for LEDs that emit light of different frequency.

The table shows their results.

f / 10^{14} Hz	V / V
4.8	0.18 ± 0.02
5.3	0.30 ± 0.02
5.7	0.40 ± 0.02
6.4	0.56 ± 0.02
6.8	0.66 ± 0.02
7.9	0.92 ± 0.02

It is suggested that the relationship between *V* and *f* is

$$V = \frac{h}{e}f - \frac{K}{e}$$

where *e* is the charge on an electron, *h* is the Planck constant and *K* is a constant.

© OCR 2025

20

The student plots a graph of V / V on the y-axis against f / 10^{14} Hz on the x-axis is plotted.

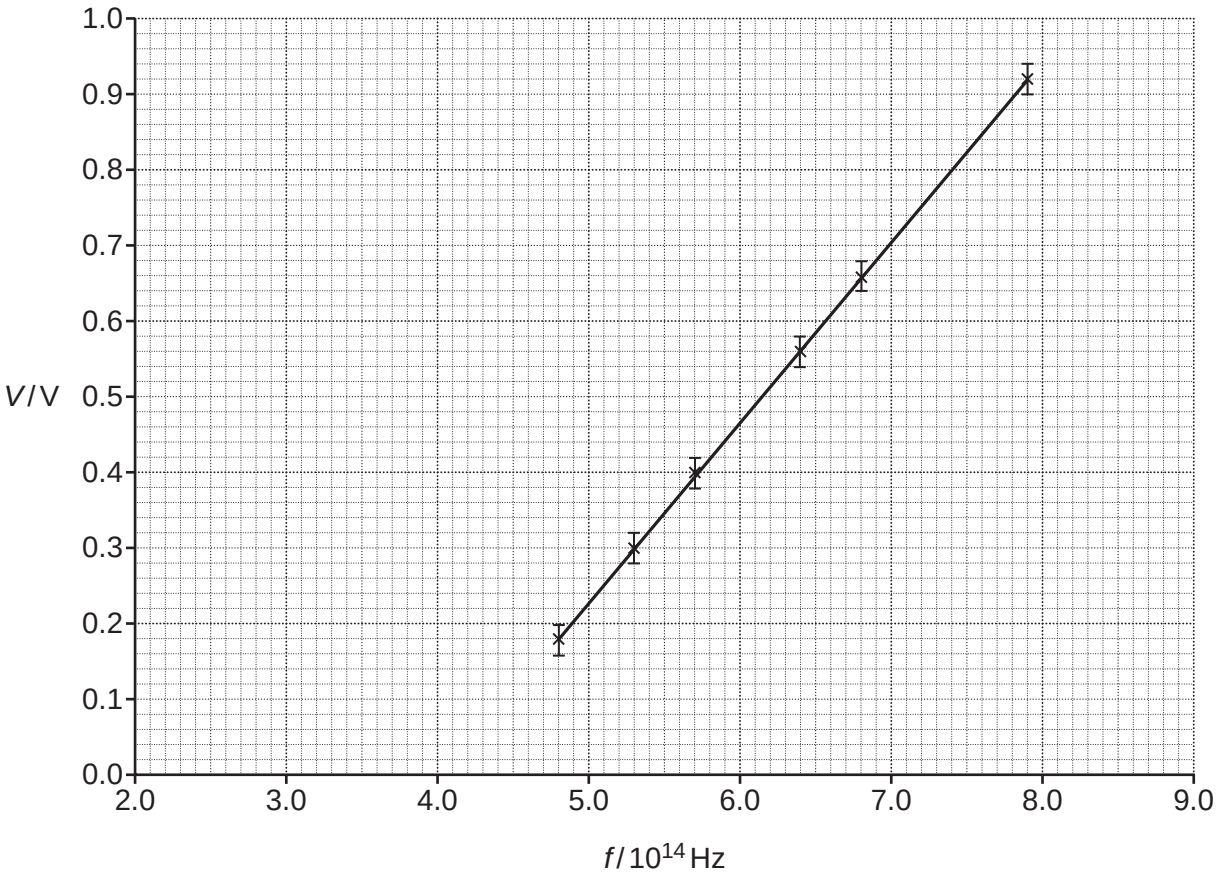

Describe how to measure V accurately **and** use the graph to determine h and K.

Include the percentage uncertainty in your value of h. **[6]**

.....

.....

.....

.....

.....

.....

.....

.....

.....

.....

.....

© OCR 2025

.....

.....

.....

.....

Additional answer space if required

.....

.....

.....

.....

.....

END OF QUESTION PAPER

© OCR 2025

EXTRA ANSWER SPACE

If you need extra space use these lined pages. You must write the question numbers clearly in the margin.

© OCR 2025

© OCR 2025

OCR
Oxford Cambridge and RSA

Copyright Information

OCR is committed to seeking permission to reproduce all third-party content that it uses in its assessment materials. OCR has attempted to identify and contact all copyright holders whose work is used in this paper. To avoid the issue of disclosure of answer-related information to candidates, all copyright acknowledgements are reproduced in the OCR Copyright Acknowledgements Booklet. This is produced for each series of examinations and is freely available to download from our public website (www.ocr.org.uk) after the live examination series.

If OCR has unwittingly failed to correctly acknowledge or clear any third-party content in this assessment material, OCR will be happy to correct its mistake at the earliest possible opportunity.

For queries or further information please contact The OCR Copyright Team, The Triangle Building, Shaftesbury Road, Cambridge CB2 8EA.

OCR is part of Cambridge University Press & Assessment, which is itself a department of the University of Cambridge.

© OCR 2025